CM-PR1276ZJ

Corner Mount Bracket

Parameters:

Model / Parameter	CM-PR1276ZJ Corner Mount Bracket
Appearance	Hikvision White
Range of Application	Adopted with some wall mount bracket
Material	Aluminum Alloy
Dimension	126×105×250mm
Weight	1950g

Notice:

- The site of screw hole should be noticed when using with wall mount bracket
- The bracket should be installed on flat wall
- Load capacity of pole should be more than 3 times the weight of camera and bracket
- Load capacity of clamp is 10KG

Features:

- For corner mounting
- Aluminum alloy is used for mounting plate
- Add the field view angle of camera

Dimension:

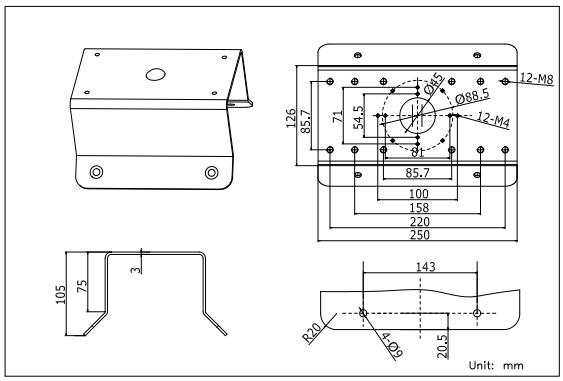

Installation Step:

① Choose appropriate wall and install the bracket with expansion bolt

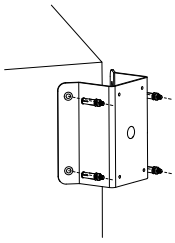

② Screw up and fix the bracket firmly

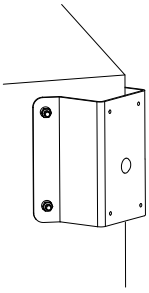

③ Complete the bracket installation and wiring for camera adoption

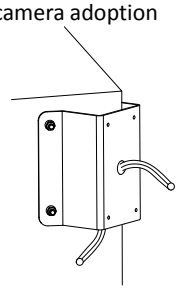

Note: The actual bracket may vary from the picture above.